A Laboratory Manual for

Elements of Robotics & Kinematics (BE04041011)

B.E. Semester 4 (Robotics & Automation)

Directorate of Technical Education, Gandhinagar, Gujarat

L. D. College of Engineering, Ahmedabad

Certificate

This is to certify that Mr./Ms. _____ Enrollment No. _____of B.E. Semester 4 Robotics & Automation of this Institute (GTU Code: 028) has satisfactorily completed the Practical / Tutorial work for the subject **Elements of Robotics & Kinematics (BE04041011)** for the academic year _____

Place: _____

Date: _____

Name and Sign of Faculty member

Head of the Department

Preface

Main motto of any laboratory/practical/field work is for enhancing required skills as well as creating ability amongst students to solve real time problem by developing relevant competencies in psychomotor domain. By keeping in view, GTU has designed competency focused outcome-based curriculum for engineering degree programs where sufficient weightage is given to practical work. It shows importance of enhancement of skills amongst the students and it pays attention to utilize every second of time allotted for practical amongst students, instructors and faculty members to achieve relevant outcomes by performing the experiments rather than having merely study type experiments. It is must for effective implementation of competency focused outcome-based curriculum that every practical is keenly designed to serve as a tool to develop and enhance relevant competency required by the various industry among every student. These psychomotor skills are very difficult to develop through traditional chalk and board content delivery method in the classroom. Accordingly, this lab manual is designed to focus on the industry defined relevant outcomes, rather than old practice of conducting practical to prove concept and theory.

By using this lab manual students can go through the relevant theory and procedure in advance before the actual performance which creates an interest and students can have basic idea prior to performance. This in turn enhances pre-determined outcomes amongst students. Each experiment in this manual begins with competency, industry relevant skills, course outcomes as well as practical outcomes (objectives). The students will also achieve safety and necessary precautions to be taken while performing practical.

This manual also provides guidelines to faculty members to facilitate student centric lab activities through each experiment by arranging and managing necessary resources in order that the students follow the procedures with required safety and necessary precautions to achieve the outcomes. It also gives an idea that how students will be assessed by providing rubrics.

This is the fundamental course for the Robotics and Automation program. The aim of this course is to give an overview of basic tools and techniques used for Industrial applications. IT emphasizes the physical understanding of robot kinematics and dynamics, differential motion, design and control of robotic arms. This course supports the students to design and develop the systems, automation and robotics for various industrial applications such as identifying the shape, colour of an object. From this subject, students can make use of MATLAB / Python or any robotic simulation software to model the different types of robots and they can able to calculate the work volume for different robots.

Utmost care has been taken while preparing this lab manual however always there is chances of improvement. Therefore, we welcome constructive suggestions for improvement and removal of errors if any.

Practical – Course Outcome matrix

Course Outcomes (COs):

1. **Explain the history, classifications and basic terminologies of robotics and various configuration of robots.**
2. **Analyze forward kinematic model for planar and spatial robot manipulator.**
3. **Evaluate inverse kinematic model for multi-DOF robot manipulators.**
4. **Solve Jacobian matrix for differential motion of robot.**

Sr. No.	Objective(s) of Experiment	CO1	CO2	CO3	CO4	
1.	Study of Robot terminology, robot components and robot configuration.	√				
2.	Study of Robot work volume for different robot configurations.	√				
3.	Study of different robot grippers and design of the grippers.	√				
4.	Demonstration of Robot movements through robot programming.		√			
5.	Demonstration of simple robot application e.g. Pick and place and its programming.		√			
6.	Write the computer codes for robot position analysis.		√			
7.	Write computer codes for forward kinematics of different robot configurations.		√			
8.	Write computer codes for inverse kinematics of different robot configurations.			√		
9.	Write computer codes for Jacobian matrix of different robot configurations.				√	

Index
(Progressive Assessment Sheet)

Sr. No.	Title of Experiment	Page No.	Date of performance	Date of submission	Assessment Marks	Sign. of Teacher with date	Remarks
1	Study of Robot terminology, robot components and robot configuration.						
2	Study of Robot work volume for different robot configurations.						
3	Study of different robot grippers and design of the grippers.						
4	Demonstration of Robot movements through robot programming.						
5	Demonstration of simple robot application e.g. Pick and place and its programming.						
6	Write the computer codes for robot position analysis.						
7	Write computer codes for forward kinematics of different robot configurations.						
8	Write computer codes for inverse kinematics of different robot configurations.						
9	Write computer codes for Jacobian matrix of different robot configurations.						
Total							

EXPERIMENT 1

AIM: To study robot terminology, major components of a robot, and different robot configurations used in industrial applications.

1. Theory

Definition:

According to **International Organization for Standardization (ISO):**

An automatically controlled, reprogrammable, multipurpose manipulator programmable in three or more axes, which can be either fixed in place or mobile for use in industrial automation applications.

According to **Robot Institute of America (RIA)**

It is a reprogrammable, multi-functional manipulator designed to move materials, parts, tools or specialized devices through variable programmed motions for the performance of a variety of tasks`.

1.1 Robot Terminology

1. Robot
   A robot is a reprogrammable, multifunctional manipulator designed to move materials, parts, tools, or devices through programmed motions for the performance of a variety of tasks.
2. Robotics
   Robotics is the branch of engineering that deals with the design, construction, control, and application of robots.
3. Manipulator
   The manipulator is the mechanical arm of the robot consisting of links and joints used to position the end effector.
4. End Effector

   An end effector is the device attached to the wrist of the robot to perform a specific task such as gripping or welding.
5. Degrees of Freedom (DOF)
   Degrees of freedom refer to the number of independent motions a robot can perform.
6. Workspace
   Workspace is the total volume of space that can be reached by the robot end effector.
7. Accuracy

Accuracy is the ability of the robot to reach a specified target position.

8. Repeatability
   Repeatability is the ability of the robot to return repeatedly to the same position.

1.2. Robot Components

A robot system consists of the following main components:

1. Manipulator – Provides motion and reach using links and joints.
2. End Effector – Performs the required task on the workpiece.
3. Actuators – Provide motion to joints (electric, hydraulic, pneumatic).
4. Sensors – Provide feedback such as position, force, and proximity.
5. Controller – Controls robot motion and executes programs.
6. Power Supply – Supplies required power to the robot system.

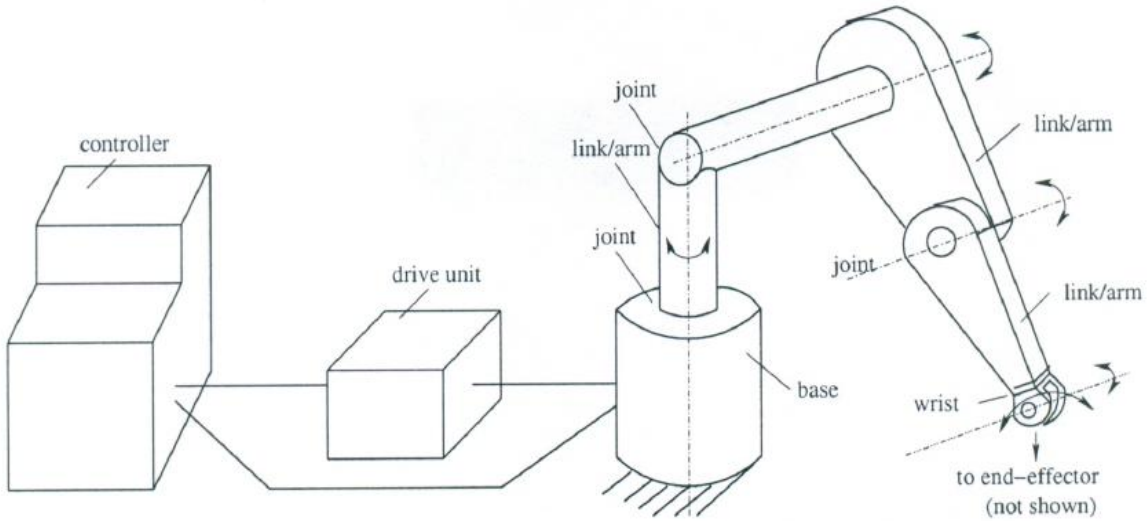

Figure: Components of Robot

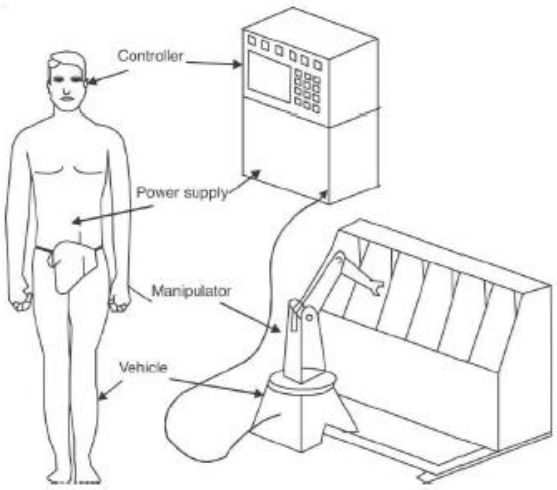

Figure: Comparison of Parts of Robot and Human Being.

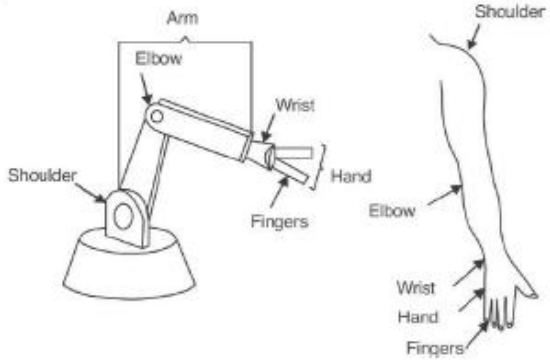

Figure. Comparison of Human and Robot Manipulator

1.3. Robot Configuration

Robot configuration refers to the geometric arrangement of joints and links of a robot.

1.3.1. Cartesian Coordinate Robots (PPP or SSS)

- Linear movement along three different axes
- Have either sliding or prismatic joints, that is, SSS or PPP
- Rigid and accurate
- Suitable for pick and place type of operations, assembly operations, arc welding and handling machine tools
- Examples: IBM's RS-1, Sigma robot

Applications: These types of robots are used for:

- Pick and place work
- Application of sealant
- Assembly operations Handling machine tools
- Arc welding

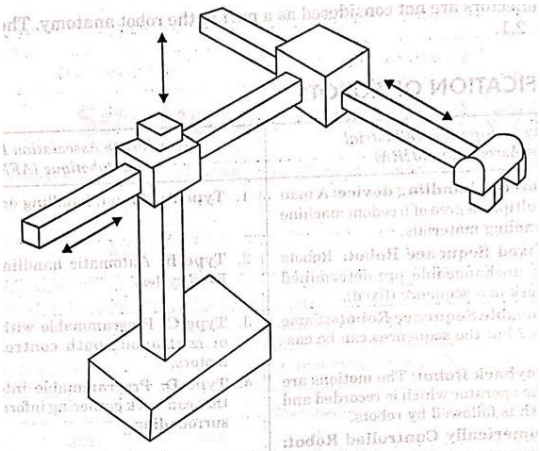

Cartesian Robot.

1.3.2. Cylindrical Coordinate Robots (TPP or TSS)

- Two linear and one rotary movement
- Represented as TPP, TSS
- High rigidity of the manipulator
- Used to handle parts/ objects in manufacturing, spot welding, handling at die-

casting machines

- Cannot reach the objects lying on the floor
- Poor dynamic performance
- Examples: Versatran 600

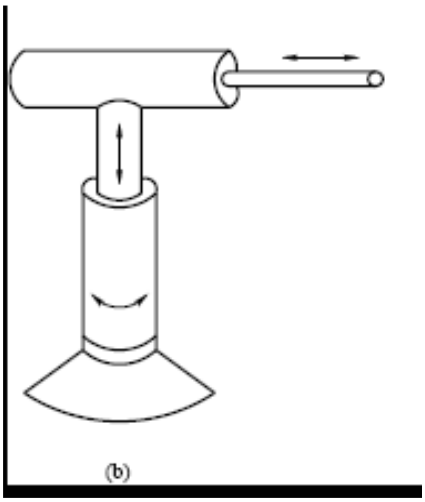

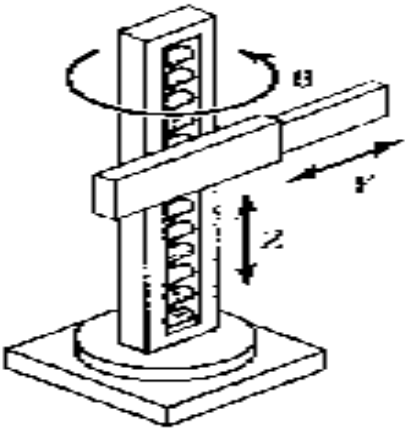

Applications:

- Assembly operations
- Handling machine tools
- Spot-welding
- Handling die-casting machines

1.3.3. Spherical Coordinate or Polar Coordinate Robots

- One linear and two rotary movement
- Represented as TRP, TRS
- Suitable for handling parts/objects in manufacturing
- Can pick up objects lying on the floor
- Poor dynamic performance
- Examples: Unimate 2000B

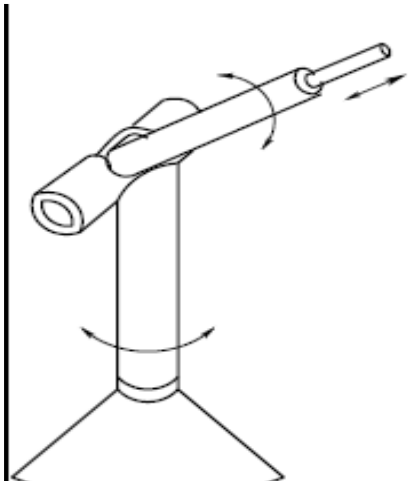

Applications:

- Handlings at die casting or fettling machines Handling machine tools
- Arc/spot welding

1.3.4. Revolute Coordinate or Articulated Coordinate Robots

- Rotary movement about three independent axes
- Represented as TRR
- Suitable for handling parts/components in manufacturing system
- Rigidity and accuracy may not be good enough
- Examples: T^3, PUMA

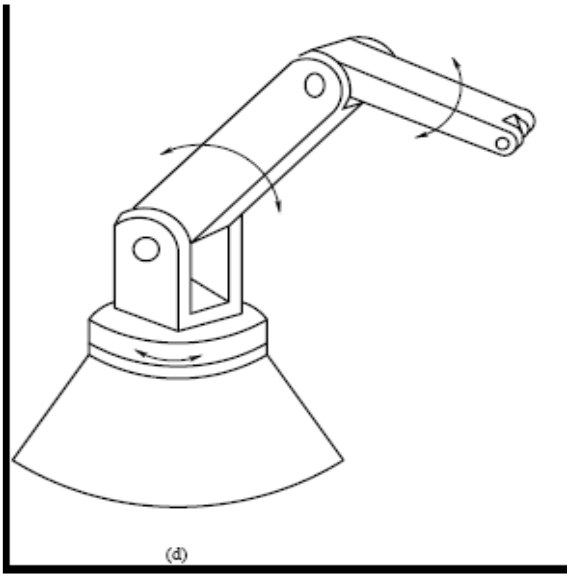

Applications:

- Assembly operations
- Die casting
- Fettling machines
- Gas welding
- Arc welding
- Spray-painting

1.3.5. SCARA Robot: Selective Compliance Assembly Robot Arm

- One style of robot that has recently become quite popular is a combination of the articulated arm and the cylindrical robot.
- This robot has more than three axes and is called a SCARA Robot.

- It is used widely in electronic assembly.
- The rotary axes are mounted vertically rather than horizontally.

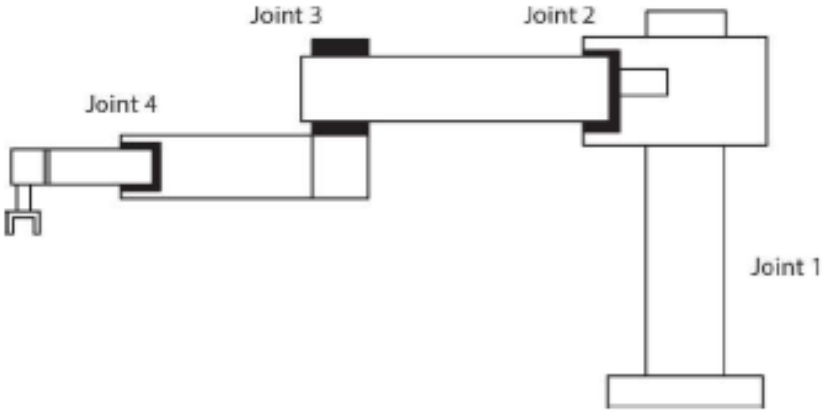

Quiz:

Q1. Classify the robots according to Japan Industrial Robot Association (JIRA)

Q2. Explain with neat sketch different types of joints used in robots. Draw the symbolic representation of joints. What is significance of joints in the robots?

Q3. Explain the classification of robot (other than JIRA).

EXPERIMENT 2

Aim : Study of Robot work volume for different robot configurations.

1. Theory:

The work volume (or workspace) of a robot is the 3D region in space that the robot's end-effector can reach, considering:

- Joint limits
- Link lengths
- Mechanical constraints
- Sometimes orientation constraints (position-only vs position + orientation)

Two common notions:

- Reachable workspace: all points the end-effector can reach.
- Dexterous workspace: points where the end-effector can reach with *all* required orientations.

2. Major Robot Configurations and Their Work Volumes:

2.1. Workspace of Cartesian Coordinate Robot:

Configuration: Three orthogonal linear joints (X, Y, Z)

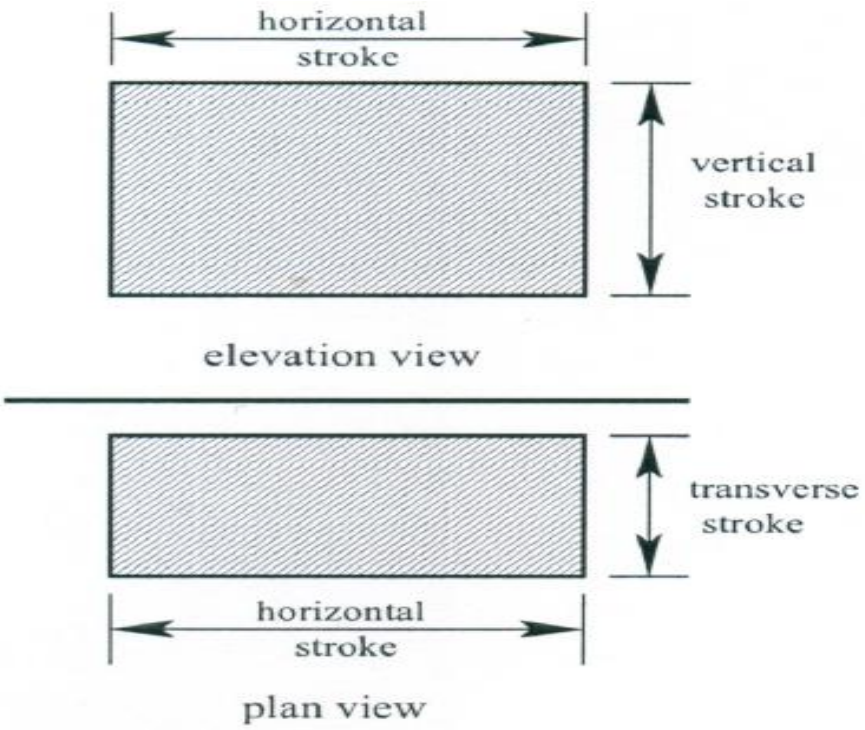

Characteristics:

- Workspace = product of axis travels
- Very simple and fully usable volume
- No singularities within the volume

Advantages:

- 100% usable workspace
- High accuracy and stiffness
- Simple control and programming

Disadvantages:

- Large physical footprint
- Limited flexibility

Applications:

- CNC machines
- Pick-and-place gantries
- 3D printers

2.2. Workspace of Cylindrical Coordinate Robot

Configuration: One rotary joint + two linear joints

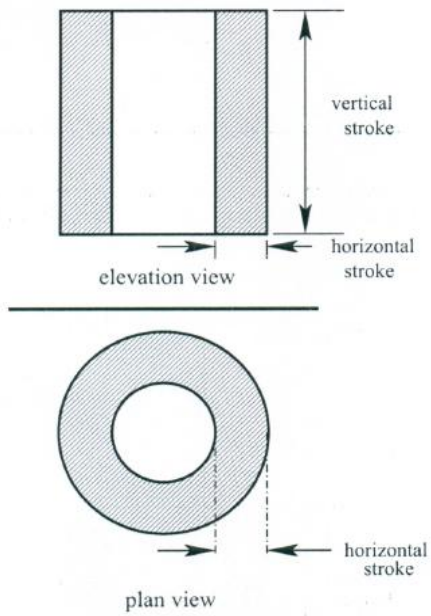

Characteristics:

- Rotation creates circular symmetry
- Dead zone near the center column

Advantages:

- Good reach around a central axis
- Compact compared to Cartesian

Disadvantages:

- Limited dexterity
- Central void region

Applications:

- Machine loading/unloading
- Assembly tasks

2.3. Workspace of Spherical Coordinate Robot

Configuration: Two rotary joints + one linear joint

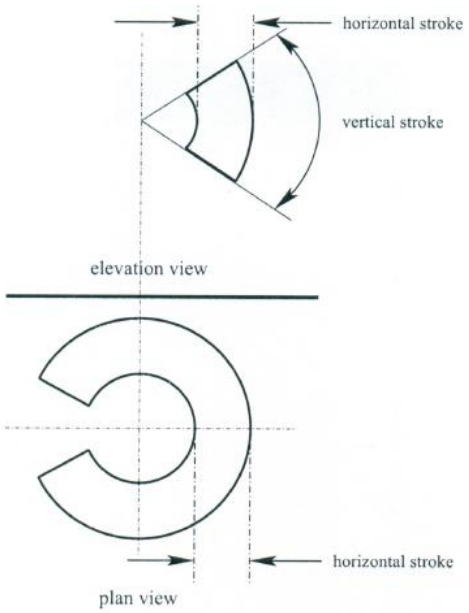

Characteristics:

- Radial reach with angular motion
- Workspace limited by joint angle ranges

Advantages:

- Wide angular coverage
- Moderate footprint

Disadvantages

- Complex kinematics
- Lower accuracy near singularities

Applications:

- Welding
- Die casting

- Spray painting

2.4. Workspace of Revolute or Articulated Coordinate Robot

Configuration: 5–7 rotary joints (human-arm-like)

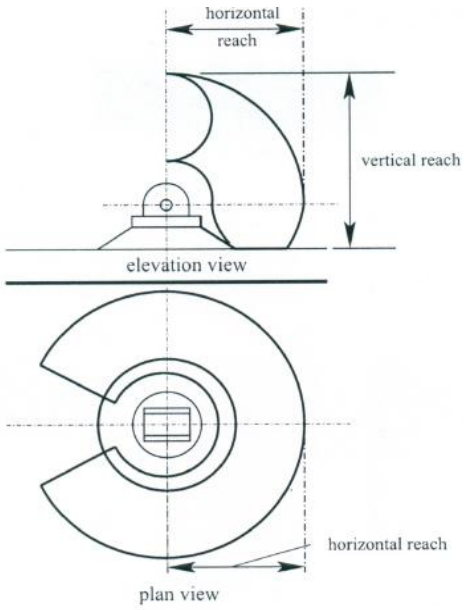

Characteristics:

- Highly dependent on joint limits
- Internal voids and complex boundaries
- Dexterous workspace is much smaller than reachable workspace

Advantages:

- Extremely flexible
- High orientation capability
- Small footprint

Disadvantages:

- Complex control
- Singularities
- Not all workspace is usable

Applications:

- Welding
- Painting
- Assembly
- Medical and service robots

2.5. Workspace of SCARA Robot

Configuration: Two coplanar rotary joints + vertical linear joint

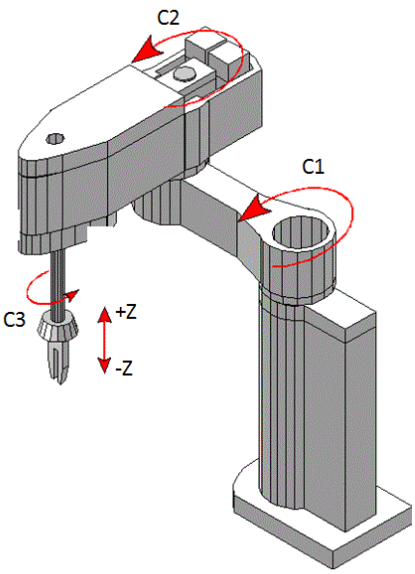

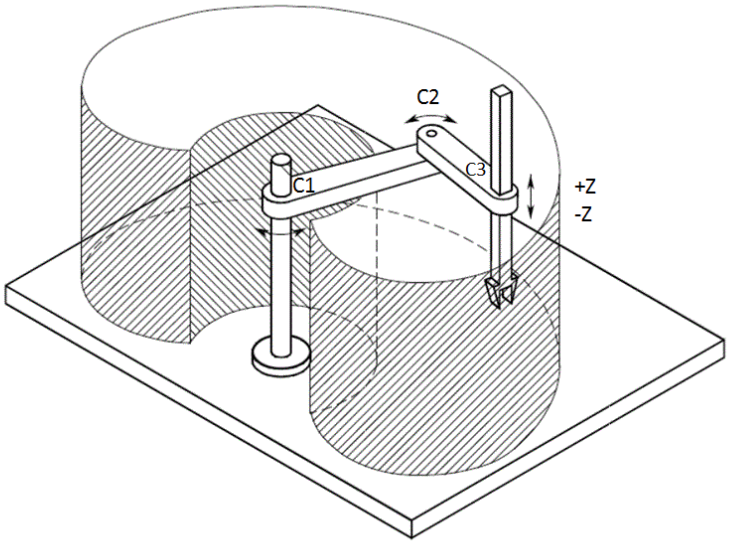

Characteristics:

- Large horizontal reach
- Limited vertical motion
- Excellent repeatability in X–Y plane

Advantages:

- Very fast
- Ideal for planar assembly

Disadvantages:

- Poor orientation capability
- Small dexterous workspace

Applications:

- Electronics assembly
- Pick-and-place
- Packaging

Comparative Summary

Robot Type	Workspace Shape	Volume Size	Dexterity	Accuracy
Cartesian	Cuboid	Large	Low	Very High
Cylindrical	Cylinder	Medium	Low	High
Spherical	Spherical shell	Medium	Medium	Medium
SCARA	Annular cylinder	Medium	Low	Very High
Articulated	Irregular sphere	Large	Very High	High
Parallel	Dome / Pyramid	Small	Medium	Very High

Quiz:

A. Very Short Answer Questions

1. Define robot work volume (workspace).
2. What is the difference between reachable workspace and dexterous workspace?
3. What type of joint produces linear motion in a robot?
4. Which robot configuration resembles the human arm?
5. Why do Cartesian robots have fully usable work volumes?
6. What is meant by a “dead zone” in robot workspace?

B. Short Answer Questions

1. Describe the work volume of a Cartesian robot and list two applications.
2. Compare the work volumes of SCARA and cylindrical robots.
3. Discuss the effect of joint limits on robot workspace.
4. Why are parallel robots limited to small work volumes?
5. Explain how link length affects robot workspace.

C. Long Answer / Descriptive Questions

1. Discuss the factors affecting the work volume of a robot.

EXPERIMENT 3

Aim: Study of different robot grippers and design of the grippers.

1. Theory:

In robotics, an end effector is a device or tool connected to the end of a robot arm. Basically, it is a tool to grip, hold, and transport objects and position them in a desired location. End effectors are the devices through which a robot interacts with the world around it, grasping and manipulating parts, inspecting surfaces, and working on them. As such, end effectors are among the most important elements of a robotic application and an integral component of the overall tooling, fixturing, and sensing strategy. An end effector attached to the robotic arm is shown in Figure.

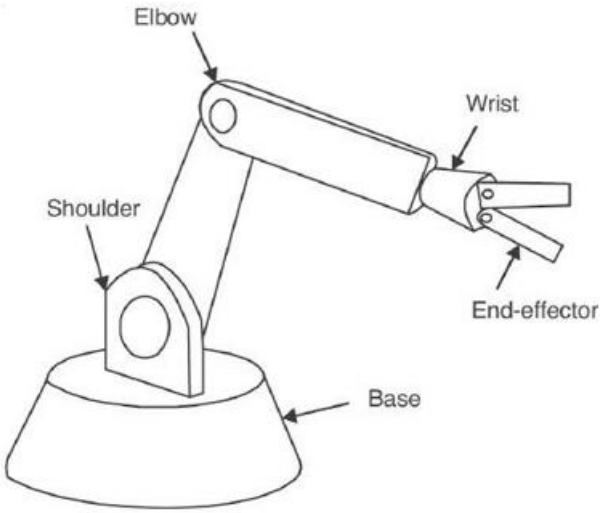

2. Classification of End Effectors:

An end effector covers a wide range of different tools and devices that can be classified into two main categories:

A) Grippers

B) Tools for process application

2.1. Grippers:

Grippers are end effectors that actually grip a part for transfer operations in the work envelope of the robot. A gripper is a component of the robot used to manipulate an object loose from the robot itself. This can be a component it needs to pick up, or the waste it is programmed to find and dispose of. Grippers include mechanical hands and also anything like hooks, magnets, and suction devices, which can be used for holding or gripping.

A robot gripper is shown in Figure.

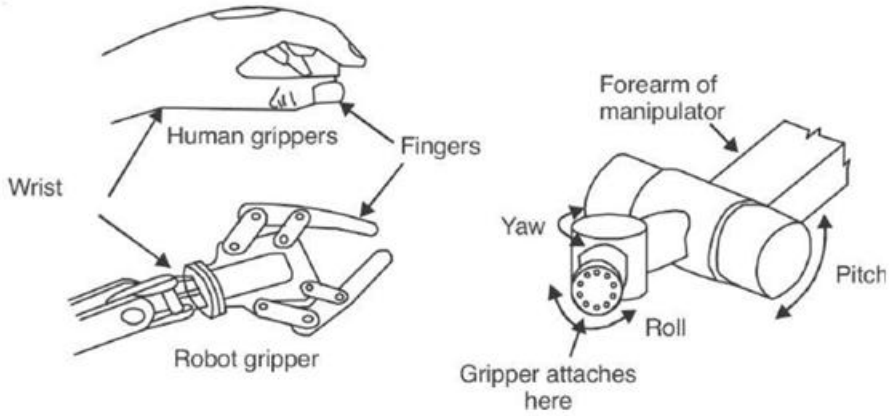

Selection of Gripper:

The selection of gripper is usually made by examining the geometry of the part, its orientation, the space available, and the manufacturing treatment to be performed.

Selection of the gripper is based upon a number of factors that may need consideration:

a) Source of power
b) Gripping force
c) Gripping style
d) Weight
e) Environmental capabilities
f) Sensor capabilities
g) Number of jaws
h) Other factor

a) **Source of Power:** According to source of power, grippers are classified as pneumatic, hydraulic, and electrical

b) **Gripping force:** When considering the gripping force required, a number of factors must be considered. Not only must the mass of the object to be gripped be taken into account but also the accelerations imposed on it by the robot must be taken into account. The coefficient of friction between the gripper and the object may also be an important factor.

c) **Gripping Style:** The configurations of grippers include parallel and angular styles, and those with two or three jaws. Parallel jaws move in a motion parallel in relation to the gripper body, while angular jaws open and close around a central pivot point, moving in an arcing motion. Determining which gripper to use is dependent on the specific needs of an application. Angular and Parallel grippers are as shown in figure

Angular grippers

- Less costly
- Save time when picking parts off a conveyor
- Cannot handle wide range of part size
- Don't resist side loads as well.

Parallel grippers

- More costly
- Slow in processing
- Can handle large sized parts
- Can resist

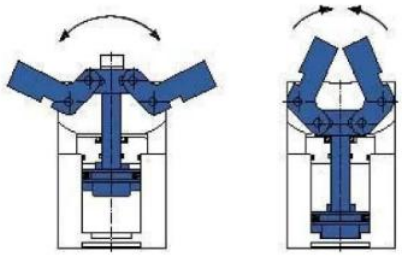

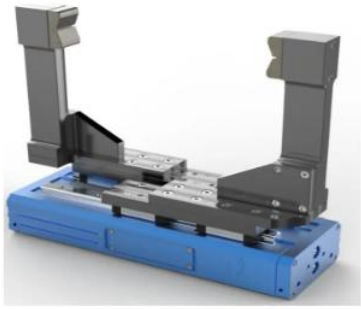

Figure: Angular and Parallel Grippers

A gripper can also be **external or internal**. The external gripper is used to grasp the exterior surface of objects with closed fingers, whereas the internal gripper grips the internal surface of objects with open fingers. External and internal grippers are shown in Figure 15.5.

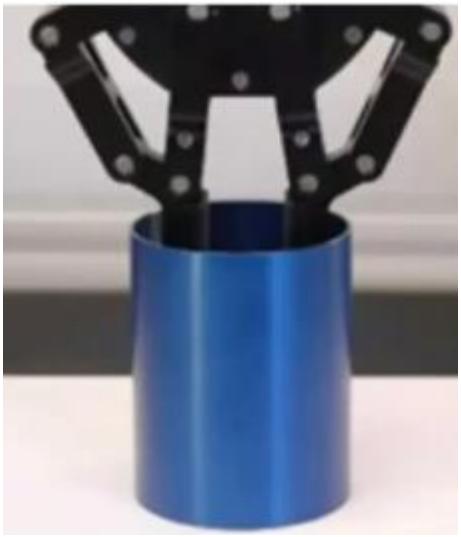

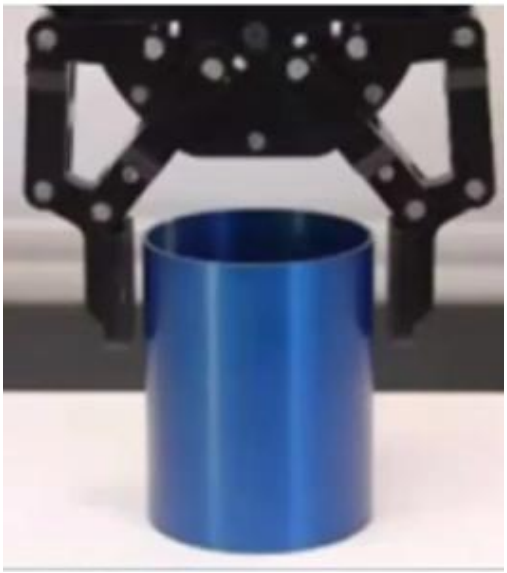

Figure: Internal Gripper **External Gripper**

d) **Weight:** Industrial robots have fixed lifting capabilities and the combined weight of the gripper and gripped component may be important. Even when this weight is within the capability of the robot, it may cause an unacceptable increase in the cycle time of the operation. The distance between the robot flange and the center of mass may also be important and this should be kept to a minimum

e) **Environmental Capabilities:** End effectors are often required to work in hostile environments. High temperatures, dust, or the presence of chemicals will require special materials or designs to be used.

f) **Sensor Capabilities**: For certain applications, some degree of sensory feedback from the

gripper is necessary. This may be measurement of insertion or gripping forces or may simply be a proximity sensor to say if anything is between the jaws of the gripper. Some standard grippers are provided with feedback to show the separation of the jaws but most grippers have no feedback.

g) **Number of Jaws (Two or Three Jaw Gripper):** In two jaw units, which come in both parallel and angular styles, the grasper affords two mounting spots for the fingers to hold the part. The jaws move in a simultaneous motion, opening and closing toward the central axis of the gripper body. Three jaws furnish more contact with the part to be clasped and are more accurate in centering than are two jaws.

h) **Others:** Other factors to be considered include the speed of the gripper jaws and the range of sizes of the components they can grip. The amount of maintenance required is also important though most modern mechanisms require little or no maintenance. For some situations, the behavior of the gripper on power failure may be critical. Some but not all use either springs to apply the gripping force or non-return valves to ensure that pressure is maintained

2.2. Gripping Mechanisms:

A gripper is specifically end of arm tooling that uses a mechanical mechanism and actuator to grasp a part with gripping surfaces. Fingers are designed to: Physically mate with the part for a good grip. Apply enough force to the part to prevent slipping.

Typical mechanisms are

- Linkage actuation
- Gear and rack
- Cam
- Screw
- Rope and pulley
- Miscellaneous, e.g., bladder, diaphragm

2.3. Classification of Grippers:

1. Single gripper and double gripper:

Single gripper: Only one gripping device is mounted on the wrist
Double gripper: Two independent gripping devices are attached to the wrist
Example: Two separate grippers mounted on the wrist for loading and unloading applications.

2. Internal gripper vs. External gripper

3. Soft gripper vs. Hard gripper

Hard gripper: Point contact between the finger and object

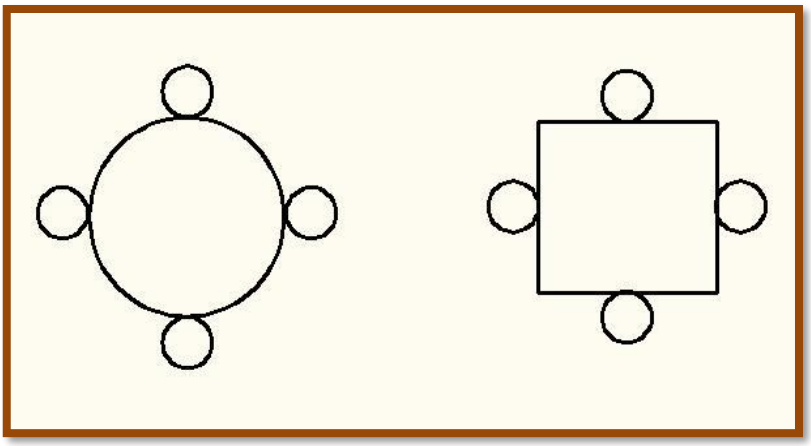

Soft gripper: Area (surface) contact between the finger and object

4. Active and Passive gripper:

Active Gripper with sensor(s) + requires external Power Supply

Passive gripper: Gripper without sensor(s) + No need of external power supply

Ex: Remote Center Compliance

5. Mechanical Grippers:

The mechanical grippers use mechanical fingers actuated by a mechanism to grasp an object. A basic robot hand will have only two or three fingers. A mechanical hand that wraps around an object will rely on friction in order to secure the object it is holding. Friction between the gripper and the object will depend on two things, first is the type of surface whether it be metal on metal, rubber on metal, smooth surfaces, or rough surfaces and the second is the force which is pressing the surfaces together.

6. **Vaccume or Suction grippers:**

Suction grippers are of two types:

a. Devices operated by a vacuum: The vacuum may be provided by a vacuum pump or by compressed air

b. Devices with a flexible suction cup: This cup presses on the workpiece. Compressed air is blown into the suction cup to release the workpiece. The advantage of the suction cup is that if there is a power failure it will still work, as the workpiece will not fall down. The disadvantage of the suction cup is that they only work on clean, smooth surfaces. The suction cups are made of rubber-like materials (silicone, neoprene).

7. Magnetic Grippers:

Magnetic grippers are considered when the part to be handled is of ferrous content. The principle is the same as of vacuum grippers except that magnetic grippers replace the cups. This system has the advantage that it can quickly handle metal parts with holes. For maximum effect, the magnet needs to have complete contact with the surface of the metal to be gripped.

Quiz:

1) Explain the working principle of an end effector with the help of a sketch and give its important applications.
2) How are the robot end effectors classified?
3) List the different end effectors used on robots.
4) What are the various types of grippers used in robots?

EXPERIMENT 4

Aim : Demonstration of Robot movements through robot programming.

1. Apparatus / Software Required

- Educational Robot / Industrial Robot / Mobile Robot (as available)
- Robot Controller
- Programming Interface (Arduino IDE / RoboDK / ROS / Teach Pendant / Python, etc.)
- Power Supply
- Connecting Cables
- Computer System

2. Theory

A robot is an electromechanical device capable of performing programmed movements with accuracy and repeatability. Robot movements are controlled by programming commands that specify direction, speed, position, and timing.
Basic robot motions include:

- Linear motion
- Rotational motion
- Forward and backward movement
- Turning left and right
- Pick-and-place (for articulated robots)

By using robot programming, we can control actuators such as motors and servos to perform these movements precisely.

3. Procedure

1. Connect the robot to the controller and power supply.
2. Interface the robot controller with the computer system.
3. Open the robot programming software.
4. Initialize the robot and set the home position.
5. Write a program to perform basic movements such as:
    - Forward movement
    - Backward movement
    - Left turn
    - Right turn
    - Stop
6. Compile and upload the program to the robot controller.
7. Execute the program and observe the robot movements.
8. Verify whether the robot follows the programmed path accurately.
9. Stop the robot after completing the operation.

4. Observation

The robot performed all programmed movements such as forward, backward, left, and right turns accurately according to the given instructions.

5. Result

Thus, the demonstration of robot movements through robot programming was successfully performed.

6. Precautions

Ensure proper power supply connections.

Keep hands away from moving robot parts.

Verify the program before execution.

Use emergency stop if abnormal behavior occurs.

7. Applications

- Industrial automation
- Material handling
- Assembly lines
- Medical and service robots
- Educational robotics

Quiz:

1) Name some programming languages for robot programming.
2) Explain the use of teach pendant for robot programming.
3) Compare online and offline programming of robot.
4) Discuss the lead through programming technique used in robot programming.
5) Explain the following Manual programming

EXPERIMENT 5

Aim : Demonstration of simple robot application e.g. Pick and place and its programming.

1. Apparatus / Software Required

- Pick and Place Robot / Robotic Arm
- Robot Controller
- End Effector (Gripper)
- Power Supply
- Programming Interface (Arduino IDE / RoboDK / Teach Pendant / Python, etc.)
- Computer System
- Object to be picked and placed

2. Theory

Pick and place is a basic and widely used robot application in industrial automation. In this operation, the robot picks an object from a specified position and places it at another location. The movement is achieved by controlling joints, motors, and the gripper through a programmed sequence.

The robot follows predefined positions such as:

- Home position
- Pick position
- Place position

Robot programming ensures accuracy, repeatability, and safe operation during the pick-and-place task.

3. Procedure

1. Connect the robot to the controller and power supply.
2. Initialize the robot and set the home position.
3. Define the pick position and place position.
4. Write a robot program to control:
    - Arm movement
    - Gripper open and close
5. Compile and upload the program to the robot controller.
6. Execute the program.
7. Observe the robot picking the object from the pick position.
8. Observe the robot placing the object at the place position.
9. Return the robot to the home position.
10. Stop the robot after completing the operation.

4. Observation

The robot successfully picked the object from the pick position and placed it accurately at the

specified place position.

5. Result

Thus, the demonstration of a simple robot application (pick and place) using robot programming was successfully carried out.

6. Precautions

- Ensure correct alignment of pick and place positions.
- Avoid overloading the gripper.
- Keep hands clear of the robot during operation.
- Verify the program before execution.

7. Applications

- Industrial assembly lines
- Material handling
- Packaging systems
- Sorting operations

Quiz:

1) Write a program for pick and place of an object.
2) Write a program for palatizing of objects.

EXPERIMENT 6

Aim: Write the computer codes for robot position analysis.

1. Objectives

To understand the concept of robot position analysis

To study forward kinematics of a 3-DOF robot

To compute and visualize the end-effector position using programming

2. Apparatus / Software Required

Computer System

Programming Language: Python / MATLAB / C

Mathematical library (for trigonometric functions)

Given robot parameters (link lengths and joint angles)

3. Theory

Robot position analysis determines the position of the end-effector with respect to a fixed reference frame.
In a 3-DOF planar robotic arm, the robot consists of three rigid links connected by three revolute joints.

The end-effector position $(\boldsymbol{x}, \boldsymbol{y})$is calculated using forward kinematics:

$$\boldsymbol{x} = \boldsymbol{l_1}\cos\ \boldsymbol{\theta_1} + \boldsymbol{l_2}\cos\ (\boldsymbol{\theta_1} + \boldsymbol{\theta_2}) + \boldsymbol{l_3}\cos\ (\boldsymbol{\theta_1} + \boldsymbol{\theta_2} + \boldsymbol{\theta_3})$$
$$\boldsymbol{y} = \boldsymbol{l_1}\sin\ \boldsymbol{\theta_1} + \boldsymbol{l_2}\sin\ (\boldsymbol{\theta_1} + \boldsymbol{\theta_2}) + \boldsymbol{l_3}\sin\ (\boldsymbol{\theta_1} + \boldsymbol{\theta_2} + \boldsymbol{\theta_3})$$

Where:

$\boldsymbol{l_1}, \boldsymbol{l_2}, \boldsymbol{l_3}$= link lengths

$\boldsymbol{\theta_1}, \boldsymbol{\theta_2}, \boldsymbol{\theta_3}$= joint angles

3.1. Representation of a Point in Space

In robotics, a point is represented with respect to a reference frame.

Fixed Reference Frame

Let {O} be a fixed reference frame with orthonormal axes:

$$\hat{\imath}, \hat{\jmath}, \hat{k}$$

Position Vector of a Point *P*

The position of point *P*relative to frame {O} is:

$$\mathbf{r}_{\boldsymbol{P}} = \boldsymbol{x}\,\hat{\boldsymbol{\imath}} + \boldsymbol{y}\,\hat{\boldsymbol{\jmath}} + \boldsymbol{z}\,\hat{\boldsymbol{k}}$$

or in column vector form:

$$\mathbf{r}_{\boldsymbol{P}} = \begin{bmatrix} \boldsymbol{x} \\ \boldsymbol{y} \\ \boldsymbol{z} \end{bmatrix}$$

A point has no orientation, only position.

A point is used to define:

- Tool centre point (TCP)
- Joint locations
- Feature positions

3.2 Representation of a Vector in Space

A vector is independent of location and represents direction and magnitude.
Vector Representation
Let vector v be:

$$\mathbf{v} = v_x\hat{\imath} + v_y\hat{\jmath} + v_z\hat{k}$$

Matrix form:

$$\mathbf{v} = \begin{bmatrix} v_x \\ v_y \\ v_z \end{bmatrix}$$

In robotics:

- Velocity, Force, Moment, Angular velocity are all vectors.

3.3. Representation of a Frame in Space

A coordinate frame is defined by:

1. An origin
2. Three mutually orthogonal unit vectors

Frame {A} with respect to {O}
Let frame {A} have unit vectors:

$$\hat{x}_A, \hat{y}_A, \hat{z}_A$$

Then frame {A} is represented by:

- Orientation → rotation matrix
- Position → translation vector

3.4. Representation of a Frame at the Origin of a Fixed Frame

If frame {A} is located at the origin of {O}, but rotated:
Rotation Matrix

$$^{O}R_A = \begin{bmatrix} \hat{x}_A \cdot \hat{\imath} & \hat{y}_A \cdot \hat{\imath} & \hat{z}_A \cdot \hat{\imath} \\ \hat{x}_A \cdot \hat{\jmath} & \hat{y}_A \cdot \hat{\jmath} & \hat{z}_A \cdot \hat{\jmath} \\ \hat{x}_A \cdot \hat{k} & \hat{y}_A \cdot \hat{k} & \hat{z}_A \cdot \hat{k} \end{bmatrix}$$

Important properties:

- **Orthogonal matrix**
- $R^T R = I$
- $\det(R) = +1$

3.5. Representation of a Rigid Body

A rigid body is completely described by attaching a body-fixed frame.
Thus, rigid body representation requires:

1. Position of origin
2. Orientation of axes

Let body frame be {B}, fixed frame be {O}.
Translation Vector

$$^{O}\mathbf{p}_B = \begin{bmatrix} p_x \\ p_y \\ p_z \end{bmatrix}$$

Orientation Matrix

$$^{O}R_B$$

3.6. Homogeneous Transformation Matrix (Core of Ghosal)

To combine rotation and translation, we use homogeneous coordinates.
Homogeneous Transformation

$$^{O}T_B = \begin{bmatrix} ^{O}R_B & ^{O}\mathbf{p}_B \\ 0\ 0\ 0 & 1 \end{bmatrix}$$

This matrix:

- Maps coordinates from frame {B} to {O}
- Encodes full pose of a rigid body

3.7. Representation of Transformation of a Point

Let a point Pbe expressed in frame {B}:

$$^{B}\mathbf{p}_P = \begin{bmatrix} x_B \\ y_B \\ z_B \\ 1 \end{bmatrix}$$

Then its coordinates in frame {O}:

$$^{O}\mathbf{p}_P = \quad ^{O}T_B \quad ^{B}\mathbf{p}_P$$

This is central to forward kinematics.

3.8. Pure Translation

If frame {B} is translated but not rotated:

$$\boldsymbol{R} = \boldsymbol{I}$$

$$\boldsymbol{T} = \begin{bmatrix} 1 & 0 & 0 & p_x \\ 0 & 1 & 0 & p_y \\ 0 & 0 & 1 & p_z \\ 0 & 0 & 0 & 1 \end{bmatrix}$$

Orientation unchanged, origin shifted.

3.9. Pure Rotation

If frame {B} is rotated but not translated:

$$\mathbf{p} = \mathbf{0}$$

$$\boldsymbol{T} = \begin{bmatrix} \boldsymbol{R} & \mathbf{0} \\ \mathbf{0} & 1 \end{bmatrix}$$

3.10. Elementary Rotation Matrices

Rotation about X-axis

$$R_x(\theta) = \begin{bmatrix} 1 & 0 & 0 \\ 0 & \cos\theta & -\sin\theta \\ 0 & \sin\theta & \cos\theta \end{bmatrix}$$

Rotation about Y-axis

$$R_y(\theta) = \begin{bmatrix} \cos\theta & 0 & \sin\theta \\ 0 & 1 & 0 \\ -\sin\theta & 0 & \cos\theta \end{bmatrix}$$

Rotation about Z-axis

$$R_z(\theta) = \begin{bmatrix} \cos\theta & -\sin\theta & 0 \\ \sin\theta & \cos\theta & 0 \\ 0 & 0 & 1 \end{bmatrix}$$

4. Procedure

- Start the programming environment.
- Define the link lengths of the 3-DOF robotic arm.
- Read joint angles as input from the user.
- Convert joint angles from degrees to radians.
- Apply forward kinematics equations.
- Compute joint and end-effector positions.
- Display the end-effector coordinates.
- Plot the robot configuration graphically.

- Verify results for different joint values.

5. **Program (Python Code)**

```
import math
import matplotlib.pyplot as plt

# Link lengths
l1 = 8
l2 = 6
l3 = 4

# Joint angles in degrees
theta1 = float(input("Enter theta1 (degrees): "))
theta2 = float(input("Enter theta2 (degrees): "))
theta3 = float(input("Enter theta3 (degrees): "))

# Convert degrees to radians
t1 = math.radians(theta1)
t2 = math.radians(theta2)
t3 = math.radians(theta3)

# Joint positions
x0, y0 = 0, 0
x1 = l1 * math.cos(t1)
y1 = l1 * math.sin(t1)

x2 = x1 + l2 * math.cos(t1 + t2)
y2 = y1 + l2 * math.sin(t1 + t2)

x3 = x2 + l3 * math.cos(t1 + t2 + t3)
y3 = y2 + l3 * math.sin(t1 + t2 + t3)

# End-effector position
print("End Effector Position:")
print("X =", x3)
print("Y =", y3)
```

```
# Plotting
plt.figure()
plt.plot([x0, x1, x2, x3], [y0, y1, y2, y3], marker='o')
plt.xlabel("X Position")
plt.ylabel("Y Position")
plt.title("Position Analysis of 3-DOF Robotic Arm")
plt.grid(True)
plt.show()
```

6. Observation

The robot arm configuration changes with variation in joint angles.

The end-effector position varies according to the forward kinematics equations.

The plotted graph accurately represents the robot structure.

7. Result

Thus, the computer code for position analysis of a 3-DOF robotic arm was successfully written, executed, and the end-effector position was obtained and plotted graphically.

8. Precautions

- Ensure correct unit conversion from degrees to radians.
- Use accurate link dimensions.
- Verify mathematical equations before execution.
- Avoid unrealistic joint angle values.

9. Applications

- Robot motion planning
- Industrial robot control
- Simulation of robotic manipulators
- Automation and manufacturing systems

Quiz:

1) Modify the program for a 4-DOF and 6-DOF robotic arm

EXPERIMENT 7

Aim: To write and execute computer programs for determining the **forward kinematics** of different robot configurations and to compute the position of the end-effector.

1. Objectives

- To understand the concept of forward kinematics
- To analyze different robot configurations
- To compute end-effector position using programming
- To compare kinematic behavior of various robots

2. Apparatus / Software Required

- Computer System
- Programming Language: **Python / MATLAB / C**
- Mathematical libraries
- Robot parameters (link lengths, joint variables)

3. Theory

Forward kinematics is the process of calculating the position and orientation of a robot's end-effector from known joint parameters.
Different robot configurations have different kinematic equations depending on joint types (revolute or prismatic).

Common robot configurations:

a) **Cartesian Robot (PPP)**

b) **Cylindrical Robot (RPP)**

c) **Spherical Robot (RRP)**

d) **Planar Articulated Robot (RRR)**

a) Forward Kinematics of Cartesian Robot (PPP)

Description

- Three prismatic joints
- Motion along X, Y, and Z axes

Kinematic Equations

$$x = d_1, y = d_2, z = d_3$$

3.1 Forward Kinematics Derivation

Forward kinematics in robotics, involves computing the position and orientation of the end-effector relative to the base frame given the joint parameters (e.g., angles or displacements). This is achieved using Denavit-Hartenberg (D-H) parameters to define individual

homogeneous transformation matrices A_i for each link, then multiplying them sequentially: ${}^0T_n = A_1 A_2 \cdots A_n$.

The general form of $A_i$based on D-H parameters (θ_i, d_i, a_{i-1}, α_{i-1}) is:

$$A_i = \begin{bmatrix} \cos\theta_i & -\sin\theta_i \cos\alpha_{i-1} & \sin\theta_i \sin\alpha_{i-1} & a_{i-1}\cos\theta_i \\ \sin\theta_i & \cos\theta_i \cos\alpha_{i-1} & -\cos\theta_i \sin\alpha_{i-1} & a_{i-1}\sin\theta_i \\ 0 & \sin\alpha_{i-1} & \cos\alpha_{i-1} & d_i \\ 0 & 0 & 0 & 1 \end{bmatrix}$$

The resulting ${}^0T_n$has the rotation matrix in the top-left 3×3 block and the position vector in the top-right 3×1 column. Derivations below use the D-H tables from the book (as previously provided) and compute the product symbolically.

3.1.1. Planar 2R Manipulator:

Using the D-H table, compute $A_1$and A_2, then $T = A_1 A_2$.

- A_1: $\alpha_0 = 0$, $a_0 = 0$, $d_1 = 0$, θ_1(variable).
- A_2: $\alpha_1 = 0$, $a_1 = a_1$, $d_2 = 0$, θ_2(variable).

The product yields:

$${}^0T_2 = \begin{bmatrix} \cos(\theta_1 + \theta_2) & -\sin(\theta_1 + \theta_2) & 0 & a_1\cos\theta_1 \\ \sin(\theta_1 + \theta_2) & \cos(\theta_1 + \theta_2) & 0 & a_1\sin\theta_1 \\ 0 & 0 & 1 & 0 \\ 0 & 0 & 0 & 1 \end{bmatrix}$$

Position: $(x, y, z) = (a_1\cos\theta_1, a_1\sin\theta_1, 0)$. Orientation: Rotation by $(\theta_1 + \theta_2)$ about z-axis. This shows the second joint affects orientation but not position extension beyond the first link.

MATLAB Code: Forward Kinematics of 2-DOF Planar Robot

Objective : Find end-effector position using joint angles.

MATLAB Program

```
clc;
clear;

l1 = 1;
l2 = 0.5;

theta1 = deg2rad(30);
theta2 = deg2rad(45);

x = l1*cos(theta1) + l2*cos(theta1 + theta2);
y = l1*sin(theta1) + l2*sin(theta1 + theta2);

fprintf('End Effector Position:\n');
fprintf('x = %.3f m\n', x);
fprintf('y = %.3f m\n', y);
```

3.1.2. Planar 3R Manipulator:

Extend to three links: $T = A_1A_2A_3$.

- A_3: $\alpha_2 = 0$, $a_2 = a_2$, $d_3 = 0$, θ_3(variable).

The product simplifies to:

$$ {}^0T_3 = \begin{bmatrix} \cos(\theta_1+\theta_2+\theta_3) & -\sin(\theta_1+\theta_2+\theta_3) & 0 & a_1\cos\theta_1 + a_2\cos(\theta_1+\theta_2) \\ \sin(\theta_1+\theta_2+\theta_3) & \cos(\theta_1+\theta_2+\theta_3) & 0 & a_1\sin\theta_1 + a_2\sin(\theta_1+\theta_2) \\ 0 & 0 & 1 & 0 \\ 0 & 0 & 0 & 1 \end{bmatrix} $$

Position: $(x, y, z) = (a_1\cos\theta_1 + a_2\cos(\theta_1+\theta_2), a_1\sin\theta_1 + a_2\sin(\theta_1+\theta_2), 0)$.
Orientation: Rotation by $\theta_1 + \theta_2 + \theta_3$ about z-axis. To arrive: Multiply matrices step-by-step, using trig identities like $\cos(\alpha+\beta) = \cos\alpha\cos\beta - \sin\alpha\sin\beta$.

3.1.3. SCARA Manipulator:

For 4 DOF: $T = A_1A_2A_3A_4$.

- A_3: Prismatic, $\theta_3 = 0$(fixed), d_3(variable).
- A_4: $\alpha_3 = 0$, $a_3 = 0$, $d_4 = 0$, θ_4(variable).

The product is:

$$ {}^0T_4 = \begin{bmatrix} \cos(\theta_1+\theta_2+\theta_4) & -\sin(\theta_1+\theta_2+\theta_4) & 0 & a_1\cos\theta_1 + a_2\cos(\theta_1+\theta_2) \\ \sin(\theta_1+\theta_2+\theta_4) & \cos(\theta_1+\theta_2+\theta_4) & 0 & a_1\sin\theta_1 + a_2\sin(\theta_1+\theta_2) \\ 0 & 0 & 1 & d_3 \\ 0 & 0 & 0 & 1 \end{bmatrix} $$

Position: $(x, y, z) = (a_1\cos\theta_1 + a_2\cos(\theta_1+\theta_2), a_1\sin\theta_1 + a_2\sin(\theta_1+\theta_2), d_3)$.
Orientation: Rotation by $\theta_1 + \theta_2 + \theta_4$about z-axis. Derivation: Note $A_3$is pure translation along z (since $\theta_3 = 0$), so it decouples z from planar xy motion.

3.1.4. PUMA 560 Manipulator:

For this 6-DOF anthropomorphic arm: $T = A_1A_2A_3A_4A_5A_6$.

The full matrix is complex due to twists ($\alpha = \pm 90°$):

Let $c_i = \cos\theta_i$, $s_i = \sin\theta_i$, $c_{ij} = \cos(\theta_i + \theta_j)$, etc.

Rotation matrix elements (top-left 3×3):

- $r_{11} = ((c_1c_2c_3 - s_1s_3)c_4 - c_1s_2s_4)c_5 + (-c_1c_2s_3 - s_1c_3)s_5$
- And similarly for others (full expansion follows the matrix multiplication chain).

Position (top-right column):

$$ p_x = c_1(a_2c_2 + a_3c_{23} + d_4s_{23}) $$

$$ p_y = s_1(a_2c_2 + a_3c_{23} + d_4s_{23}) $$

$$ p_z = -a_2s_2 - a_3s_{23} + d_3 + d_4c_{23} $$

To derive: Start with arm (links 1-3) for shoulder-elbow position, then wrist (4-6) for

orientation. Multiply matrices, grouping trig terms. The book provides numerical examples with specific link lengths.

The rotation matrix involves spherical wrist terms, similar to PUMA but with prismatic extension. Derivation: $A_1$and A_2 handle base rotations, A_3 extends radially, and A_4-A_6 orient the end-effector. Compute product by associating base-to-arm and wrist separately for simplification.

4. Observation

- Each robot configuration produces different workspace shapes.
- End-effector position varies based on joint type and parameters.
- Computed values match theoretical forward kinematics equations.

5. Result

Thus, computer codes for **forward kinematics of different robot configurations** were successfully written and executed, and the end-effector positions were determined.

6. Precautions

- Convert angles from degrees to radians correctly.
- Use correct joint parameters.
- Verify equations before coding.
- Avoid exceeding joint limits.

7. Applications

- Robot simulation
- Industrial automation
- Motion planning
- Robotics research

Quiz:

1) Define description of Position, orientation and frame.
2) Explain translation mapping.
3) Explain rotational parameters with suitable example.
4) Define X-Y-Z fixed angles.
5) List and explain the properties of homogeneous transformation matrix.

6) List the important properties of rotation matrices.
7) Derive generalized equation of D-H convention.
8) Explain why homogeneous coordinates are required in modelling of robotics manipulators.
9) Explain why homogeneous transformations are required in modelling of robotics manipulators.
10) What are global and local scale factors? When these are useful? Give one situation each where global scale factor is less than one and more than one.

EXPERIMENT 8

Aim: Write computer codes for **inverse kinematics** of different robot configurations.

1. Learning Objectives

After performing this experiment, students will be able to:

- Understand inverse kinematics concepts
- Identify different robot configurations
- Derive inverse kinematics equations
- Write computer programs for IK
- Analyze multiple IK solutions

2. Apparatus / Software Required

- Computer system
- Python / MATLAB / Octave
- Calculator

3. Theory

3.1. Inverse Kinematics

Inverse kinematics (IK) is the process of calculating the joint parameters required to position the robot end-effector at a desired location. Unlike forward kinematics, IK may have multiple solutions, no solution, or may lead to singularities.

3.2. Robot Configurations Studied

3.2.1. 2-DOF Planar Revolute–Revolute (RR) Robot

3.2.2. 2-DOF Planar Prismatic–Revolute (PR) Robot

3.2.3. 3-DOF SCARA Robot (RR-P)

4. Mathematical Modeling

A) 2-DOF Planar RR Robot

Given:

- Link lengths: L_1, L_2
- End-effector position: (x, y)
- Joint variables: θ_1, θ_2

Inverse Kinematics Equations:

$$\cos(\theta_2) = \frac{x^2 + y^2 - L_1^2 - L_2^2}{2L_1L_2}$$
$$\theta_2 = \cos^{-1}(\cdot)$$
$$\theta_1 = \tan^{-1}\left(\frac{y}{x}\right) - \tan^{-1}\left(\frac{L_2 \sin\ \theta_2}{L_1 + L_2 \cos\ \theta_2}\right)$$

B) 2-DOF Planar PR Robot

Given:

- Prismatic joint displacement: d_1
- Revolute joint angle: θ_2

Inverse Kinematics Equations:

$$d_1 = \sqrt{x^2 + y^2}$$
$$\theta_2 = \tan^{-1}\left(\frac{y}{x}\right)$$

C) 3-DOF SCARA Robot (RR-P)

Given:

- Link lengths: L_1, L_2
- End-effector position: (x, y, z)
- Joint variables: θ_1, θ_2, d_3

Inverse Kinematics Equations:

$$\cos(\theta_2) = \frac{x^2 + y^2 - L_1^2 - L_2^2}{2L_1L_2}$$
$$\theta_2 = \cos^{-1}(\cdot)$$
$$\theta_1 = \tan^{-1}\left(\frac{y}{x}\right) - \tan^{-1}\left(\frac{L_2 \sin\ \theta_2}{L_1 + L_2 \cos\ \theta_2}\right)$$
$$d_3 = z_0 - z$$

Where $z_0$is the reference height of the robot base.

5. Algorithm

For RR and SCARA Robots

1. Input link lengths
2. Input end-effector coordinates
3. Compute θ_2
4. Compute θ_1
5. Compute prismatic displacement (for SCARA)

6. Display joint variables

For PR Robot

1. Input end-effector coordinates
2. Compute prismatic displacement
3. Compute revolute angle
4. Display joint variables

6. Program Code (Python)

A) RR Robot Inverse Kinematics

```
import math
L1 = float(input("Enter L1: "))
L2 = float(input("Enter L2: "))
x = float(input("Enter x: "))
y = float(input("Enter y: "))

cos_t2 = (x**2 + y**2 - L1**2 - L2**2) / (2 * L1 * L2)
theta2 = math.acos(cos_t2)
theta1 = math.atan2(y, x) - math.atan2(L2 * math.sin(theta2),
                                       L1 + L2 * math.cos(theta2))
print("Theta1 (deg):", math.degrees(theta1))
print("Theta2 (deg):", math.degrees(theta2))
```

B) PR Robot Inverse Kinematics

```
import math
x = float(input("Enter x: "))
y = float(input("Enter y: "))

d1 = math.sqrt(x**2 + y**2)
theta2 = math.atan2(y, x)
```

```
print("Prismatic joint d1:", d1)
print("Theta2 (deg):", math.degrees(theta2))
```

C) SCARA Robot Inverse Kinematics

```
import math
L1 = float(input("Enter L1: "))
L2 = float(input("Enter L2: "))
x = float(input("Enter x: "))
y = float(input("Enter y: "))
z = float(input("Enter z: "))
z0 = float(input("Enter base height z0: "))

cos_t2 = (x**2 + y**2 - L1**2 - L2**2) / (2 * L1 * L2)
theta2 = math.acos(cos_t2)
theta1 = math.atan2(y, x) - math.atan2(L2 * math.sin(theta2),
                                       L1 + L2 * math.cos(theta2))
d3 = z0 - z

print("Theta1 (deg):", math.degrees(theta1))
print("Theta2 (deg):", math.degrees(theta2))
print("Prismatic joint d3:", d3)
```

7. Observations

- Inverse kinematics may give **multiple solutions**
- Some positions are **unreachable**
- SCARA robot separates planar and vertical motion
- Numerical errors occur near singularities

8. Result

Inverse kinematics for **RR, PR, and SCARA robot configurations** were successfully implemented

using computer programming, and the corresponding joint variables were obtained for given end-effector positions.

Quiz:

1. What is inverse kinematics?

2. What is singularity?

EXPERIMENT 9

Aim: Write computer codes for Jacobian matrix of different robot configurations
of different robot configurations such as:

- 2-DOF Planar RR Robot
- 2-DOF Planar PR Robot
- 3-DOF SCARA Robot

1. Learning Objectives

After performing this experiment, students will be able to:

- Understand the physical meaning of the Jacobian matrix
- Relate joint velocities to end-effector velocities
- Derive Jacobian matrices analytically
- Identify singular configurations
- Write computer code to compute Jacobian matrices

2. Apparatus / Software Required

- Computer system
- Python / MATLAB / Octave

3. Theory

Jacobian Matrix in Robotics

The Jacobian matrix (J) relates joint velocities to end-effector linear and angular velocities.

$$\dot{X} = J(q)\dot{q}$$

Where:

- $\dot{X}$= End-effector velocity vector
- $\dot{q}$= Joint velocity vector
- $J(q)$= Jacobian matrix

➢ Importance of Jacobian

- Velocity analysis
- Force analysis
- Singularity detection
- Robot control
- Trajectory planning

4. Robot Configurations Studied

1. 2-DOF Planar RR Robot
2. 2-DOF Planar PR Robot
3. 3-DOF SCARA Robot

5. Mathematical Modelling

A) 2-DOF Planar RR Robot

Forward Kinematics

$$x = L_1\cos\ \theta_1 + L_2\cos\ (\theta_1 + \theta_2)$$
$$y = L_1\sin\ \theta_1 + L_2\sin\ (\theta_1 + \theta_2)$$

Jacobian Matrix

$$J = \begin{bmatrix} -L_1\sin\ \theta_1 - L_2\sin\ (\theta_1 + \theta_2) & -L_2\sin\ (\theta_1 + \theta_2) \\ L_1\cos\ \theta_1 + L_2\cos\ (\theta_1 + \theta_2) & L_2\cos\ (\theta_1 + \theta_2) \end{bmatrix}$$

B) 2-DOF Planar PR Robot

Forward Kinematics

$$x = d_1 \cos\ \theta_2$$
$$y = d_1 \sin\ \theta_2$$

Jacobian Matrix

$$J = \begin{bmatrix} \cos\theta_2 & -d_1 \sin\ \theta_2 \\ \sin\theta_2 & d_1 \cos\ \theta_2 \end{bmatrix}$$

C) 3-DOF SCARA Robot (RR-P)

Planar motion similar to RR robot with additional vertical motion.

Position Equations

$$x = L_1 \cos\ \theta_1 + L_2 \cos\ (\theta_1 + \theta_2)$$
$$y = L_1 \sin\ \theta_1 + L_2 \sin\ (\theta_1 + \theta_2)$$
$$z = z_0 - d_3$$

Jacobian Matrix

$$J = \begin{bmatrix} -L_1 \sin\ \theta_1 - L_2 \sin\ (\theta_1 + \theta_2) & -L_2 \sin\ (\theta_1 + \theta_2) & 0 \\ L_1 \cos\ \theta_1 + L_2 \cos\ (\theta_1 + \theta_2) & L_2 \cos\ (\theta_1 + \theta_2) & 0 \\ 0 & 0 & -1 \end{bmatrix}$$

6. Algorithm

For RR Robot

- Input link lengths L_1, L_2
- Input joint angles θ_1, θ_2
- Compute partial derivatives
- Form Jacobian matrix
- Display matrix

For PR Robot

- Input d_1, θ_2
- Compute derivatives
- Form Jacobian matrix
- Display

For SCARA Robot

- Input $L_1, L_2, \theta_1, \theta_2$
- Compute planar Jacobian
- Add vertical row
- Display matrix

7. Program Code (Python)

A) RR Robot Jacobian

```
import math

L1 = float(input("Enter L1: "))
L2 = float(input("Enter L2: "))
theta1 = math.radians(float(input("Enter theta1 (deg): ")))
theta2 = math.radians(float(input("Enter theta2 (deg): ")))
```

```
J11 = -L1*math.sin(theta1) - L2*math.sin(theta1+theta2)
J12 = -L2*math.sin(theta1+theta2)
J21 = L1*math.cos(theta1) + L2*math.cos(theta1+theta2)
J22 = L2*math.cos(theta1+theta2)

print("Jacobian Matrix:")
print([[J11, J12],
      [J21, J22]])
```

B) PR Robot Jacobian

```
import math

d1 = float(input("Enter d1: "))
theta2 = math.radians(float(input("Enter theta2 (deg): ")))

J11 = math.cos(theta2)
J12 = -d1*math.sin(theta2)
J21 = math.sin(theta2)
J22 = d1*math.cos(theta2)

print("Jacobian Matrix:")
print([[J11, J12],
      [J21, J22]])
```

C) SCARA Robot Jacobian

```
import math

L1 = float(input("Enter L1: "))
L2 = float(input("Enter L2: "))
theta1 = math.radians(float(input("Enter theta1 (deg): ")))
theta2 = math.radians(float(input("Enter theta2 (deg): ")))

J11 = -L1*math.sin(theta1) - L2*math.sin(theta1+theta2)
J12 = -L2*math.sin(theta1+theta2)
J13 = 0

J21 = L1*math.cos(theta1) + L2*math.cos(theta1+theta2)
J22 = L2*math.cos(theta1+theta2)
J23 = 0

J31 = 0
J32 = 0
J33 = -1

print("Jacobian Matrix:")
print([[J11, J12, J13],
      [J21, J22, J23],
      [J31, J32, J33]])
```

8. Observations

- Jacobian becomes singular when determinant = 0
- RR robot singularity occurs when links are aligned
- SCARA singularity occurs in planar alignment
- PR robot singularity when $d_1 = 0$

9. Result

The Jacobian matrices for RR, PR, and SCARA robot configurations were successfully derived and implemented using computer programming. The relationship between joint velocities and end-effector velocities was verified.

10. Applications

- Robot velocity control
- Force control
- Singularity analysis
- Motion planning
- Industrial automation

Quiz:

1. What is the physical meaning of Jacobian?
2. Why determinant of Jacobian is important?
3. Difference between geometric and analytical Jacobian?
4. How is Jacobian used in robot control?

Elements of Robotics & Kinematics (BE04041011)

Lab Manuals
Prepared by

Prof. Mahendra Y Patil
Associate Professor
Mechanical Engineering Department
L. D. College of Engineering, Ahmedabad

Branch Coordinator
Dr. K G Dave
Professor
Mechanical Engineering Department
L. D. College of Engineering, Ahmedabad

Committee Chairman
Dr. N M Bhatt
Professor
Mechanical Engineering Department
L. E. College, Morbi